Bailey B

Technical Data Sheet

Bailey

Safety Relief & Pressure Reducing Valves

Bailey B – Pressure Reducing Valve

Introduction

The Bailey B series of steam pressure reducing and regulating valves are single seated, spring loaded, direct acting diaphragm-actuated valves. This series automatically reduces a high inlet pressure to a lower delivery pressure and maintains a lower pressure within reasonably close limits.

These valves are designed for steam operating temperatures up to 204℃. They are available in 15mm to 50mm sizes for inlet pressures up to 17.2 barg.

The valves are fitted with laminated phosphor bronze diaphragms as standard for steam applications. In addition, the valves are fitted with a carefully matched brass piston and cylinder with a composition Teflon seat disc insert for tight shut off under no flow conditions.

Features & Benefits

Outlet pressure adjustment screw

Tight shut off

Soft seat:
- minimises risk of leakage

Monel strainer screen:
- self supporting
- maximises operability
- increases reliability
- easily removed for cleaning

Rugged, simple design:
- easy maintenance
- inline repairs

Requires no external power source:
- self activation
- self regulation

Applications

The Bailey B is suitable for steam applications within a wide range of industries. It is ideal for processes with small to medium flow rates.

Steam applications include:

- Food production
- Steam cooking
- Sterilisation
- Steam cleaning
- Rubber curing
- Brewing
- Laundry services
- Paper manufacture
- Recycling facilities
- Steam presses
- Water heating systems

Bailey B

Cross Sectional Diagram

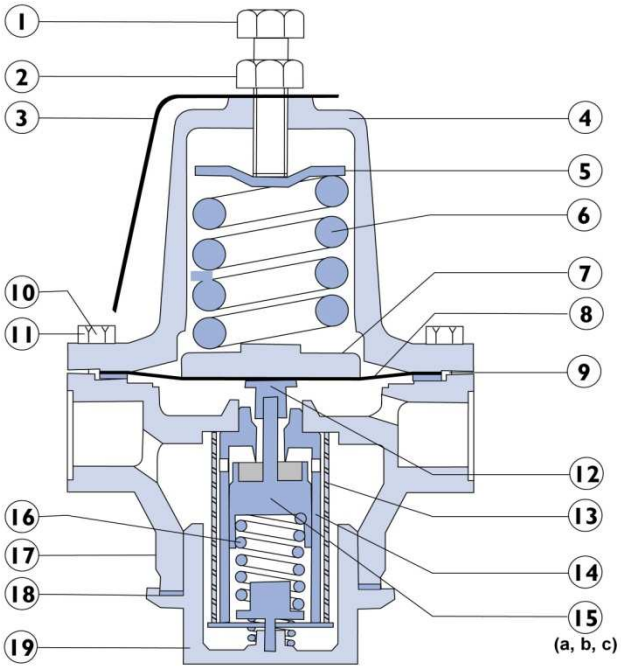

Parts List

ITEM	PART	MATERIAL
1	Adjusting Screw	St. Steel
2	Lock Nut	St. Steel
3	Name Plate	Aluminium
4	Spring Chamber	Bronze
5	Spring Button	Brass
6	Pressure Spring	St. Steel
7	Pressure Plate	Brass
8	Diaphragm*	Bronze
9	Gasket*	Teflon
10	Screw (Top)	St. Steel
11	Nut (Bottom)	St. Steel
12	Pusher Post Button	Brass
13	Screen*	Monel
14	Cylinder*	Brass
15	Piston Sub Assembly	
15a	Pusher Rod*	Brass
15b	Seat Disc*	Teflon
15c	Piston*	Brass
16	Piston Spring*	St. Steel
17	Body	Bronze
18	Gasket*	Teflon
19	Bottom Plug	Bronze

* Parts provided in repair kit

Dimensions

SIZE	DIMENSIONS			SHIP Wt
	A	B	C	(Kg)
DN15 (½")	107	114	54	3.6
DN20 (¾")	130	117	54	4.5
DN25 (1")	149	137	54	7.3
DN32 (1¼")	171	156	67	9.1
DN40 (1½")	171	156	67	9.1
DN50 (2")	235	216	89	17

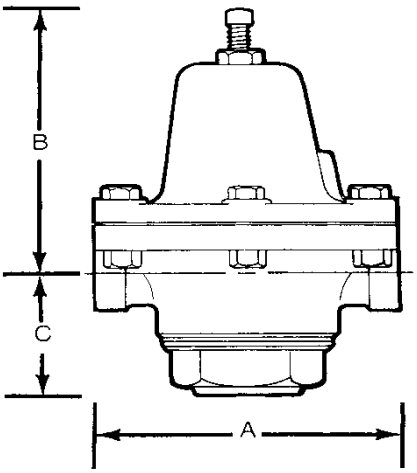

Spring Selection Chart

SIZE	Spring Ranges Maximum Working Range		Part Number
	Barg	Psig	
DN15 (½")	0.14-2.07	2-30	110
	0.69 - 3.45	10-50	111
	2.07 - 8.62	30-125	113
	3.45-10.34	50-150	8805
DN20 (¾")	0.14-1.39	2-20	110
	0.69 - 2.41	10-35	111
	2.07 - 5.17	30-75	113
	3.45-6.70	50-100	8805
	6.70-10.34	105-150	212
DN25 (1")	0.14-2.07	2-20	5356
	0.69 - 3.10	10-45	737
	1.38 - 4.14	20-60	1163
	3.79-6.70	55-100	1303
	6.21-10.34	90-150	8816
DN32 (1¼")	0.14-1.03	2-15	5356
	0.69 - 2.07	10-30	737
	1.38 - 4.14	20-60	1163
	3.79-6.70	55-100	1303
	6.21-10.34	90-150	8816
DN40 (1½")	0.14-1.03	2-15	5356
	0.69 - 2.07	10-30	737
	1.38 - 3.46	20-50	1163
	3.10-6.70	45-100	1303
	6.21-10.34	90-150	8816
DN50 (2")	0.14-0.69	2-20	5357
	0.69 - 4.14	10-60	3135
	1.38 - 6.70	20-100	760
	6.21-10.34	90-150	1904

Steam Capacity Chart

		Dry Saturated Steam -Kg/Hr					
Inlet Pressure barg (psig)	Outlet Pressure barg (psig)	15mm (½")	20mm (¾")	25mm (1")	32mm (1¼")	40mm (1½")	50mm (2")
1.72 (25)	1.03(15)	40	57	92	137	160	257
	0.69 (10)	40	57	92	137	160	257
3.45 (50)	2.76 (40)	59	83	133	200	233	375
	1.72 (25)	62	95	152	229	267	429
	0.69 (10)	62	95	152	229	267	429
5.17 (75)	4.48 (65)	63	89	143	215	251	403
	3.45 (50)	84	119	191	286	334	537
	1.72 (25)	108	155	248	372	434	697
	0.69 (10)	108	155	248	372	434	697
6.9 (100)	6.21 (90)	70	105	168	254	297	476
	5.17 (75)	133	191	305	457	533	857
	3.45 (50)	136	194	310	465	542	872
	1.72 (25)	136	194	310	465	542	872
8.62 (125)	6.70 (100)	121	200	320	457	528	900
	5.17 (75)	175	249	400	599	699	1124
	3.45 (50)	181	260	415	624	727	1169
	1.72 (25)	181	260	415	624	727	1169
10.34 (150)	9.66 (140)	57	95	159	238	279	451
	8.62 (125)	178	254	406	610	711	1143
	6.70 (100)	184	262	419	629	734	1181
	5.17 (75)	217	310	496	743	867	1394
	3.45 (50)	217	310	496	743	867	1394
13.79 (200)	10.34 (150)	206	294	470	705	823	1323
	8.28 (120)	243	346	554	831	969	1558
	6.70 (100)	284	405	648	972	1134	1823
	5.17 (75)	284	405	648	972	1134	1823
15.52 (225)	10.34 (150)	304	434	695	1042	1216	1954
	8.28 (120)	340	486	778	1167	1362	2188
	6.70 (100)	365	520	832	1248	1457	2341
	5.17 (75)	365	520	832	1248	1457	2341
17.2 (250)	10.34 (150)	311	445	711	1067	1245	2000
	8.62 (125)	403	575	919	1378	1608	2585
	6.70 (100)	403	575	919	1378	1608	2585

* capacities based on rise to dead end outlet pressure of 20%

Options

Available in 15mm (½"), 20mm (¾"), 25mm (1"), 32mm (1¼"), 40mm (1½") and 50mm (2") sizes with bronze bodies and female BSPP threaded connections.

Spare springs and repair kits also available.

Repair Kit	
Size	Part Number
15mm (½")	20274
20mm (¾")	20275
25mm (1")	20276
32mm (1¼") 40mm (1½")	20278
50mm (2")	20279

Bailey B

Figure Numbering System

B

Figure Number Options

Size	Spring Bar (psi)				
1=15mm (½")	1= 0.14-2.07 (2-30)	2= 0.69 - 3.45 (10-50)	3= 2.07 - 8.62 (30-125)	4=3.45-10.34 (50-150)	-
2=20mm (¾")	1= 0.14-1.38 (2-20)	2= 0.69 - 2.41 (10-35)	3= 2.07 - 5.17 (30-75)	4=3.45-7.60 (50-110)	5=7.20-10.34 (105-150)
3=25mm (1")	1= 0.14-1.38 (2-20)	2= 0.69 - 3.10 (10-45)	3= 1.38 - 4.14 (20-60)	4=3.79-6.90 (55-100)	5=6.21-10.34 (90-150)
4=32mm (1¼")	1= 0.14-1.03 (2-15)	2= 0.69 - 2.07 (10-30)	3= 1.38 - 4.14 (20-60)	4=3.79-6.90 (55-100)	5=6.21-10.34 (90-150)
5=40mm (1½")	1= 0.14-1.03 (2-15)	2= 0.69 - 2.07 (10-30)	3= 1.38 - 3.45 (20-50)	4=3.10-6.90 (45-100)	5=6.21-10.34 (90-150)
6=50mm (2")	1= 0.14-0.69 (2-10)	2= 0.69 - 4.14 (10-60)	3= 1.38 - 6.90 (20-100)	4=6.21-10.34 (90-150)	-

Figure numbers for the Bailey B will be compiled using the table above. All numbers will be preceded by the letter B.

Eg) Size - 15mm, Spring - 0.69-3.45 Bar = **B12**
Size - 25mm, Spring - 1.38-4.14 Bar = **B33**
Size - 60mm, Spring - 0.14.0.69 Bar = **B61**

Operation

The steam enters at the inlet port (upstream), passing through the strainer screen and seat to the valve outlet (downstream). The amount of valve opening is controlled by the diaphragm.

The diaphragm moves in accordance with the forces exerted upon it by the main spring and the downstream pressure acting on the underside of the diaphragm, which opposes the main spring force.

When the force exerted by the main spring is greater than that exerted by the downstream pressure, the valve is pushed off its seat by means of the pusher rod, thus allowing steam to flow from inlet to outlet.

When the force exerted by the downstream pressure is greater than that exerted by the main spring, the diaphragm will return to a horizontal position. The piston spring, assisted by the steam pressure, will force the valve against the seat, thus cutting off the flow by closing the valve.

Temperature Range

Temperature Range: - 20℃ to 204℃

Pressure Range

Maximum inlet pressure: steam 17.2 barg

Maximum outlet pressure: steam 10.3 barg

Minimum outlet pressure: steam 0.7 barg

CE Marking

The Bailey B valve has been certified to the requirements of the PED (Category II). Valve sizes below 32mm (1¼") do not require CE marking.

Safety Systems UK Ltd.

For further information, please contact the Bailey Sales team:
Tel: +44 (0)161 703 1899
Fax: +44 (0)161 703 8451
Email: support@safetysystemsuk.com
Web: www.safetysystemsuk.com